NavNet vx2 10.4" LCD Display Dimensional Drawings

10.4" LCD (Bracket Mount) 6.0 kg 13.2 lb

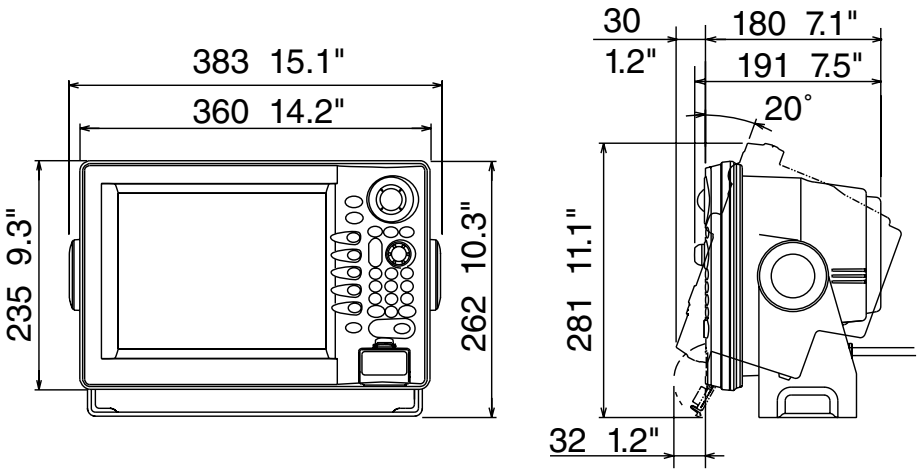
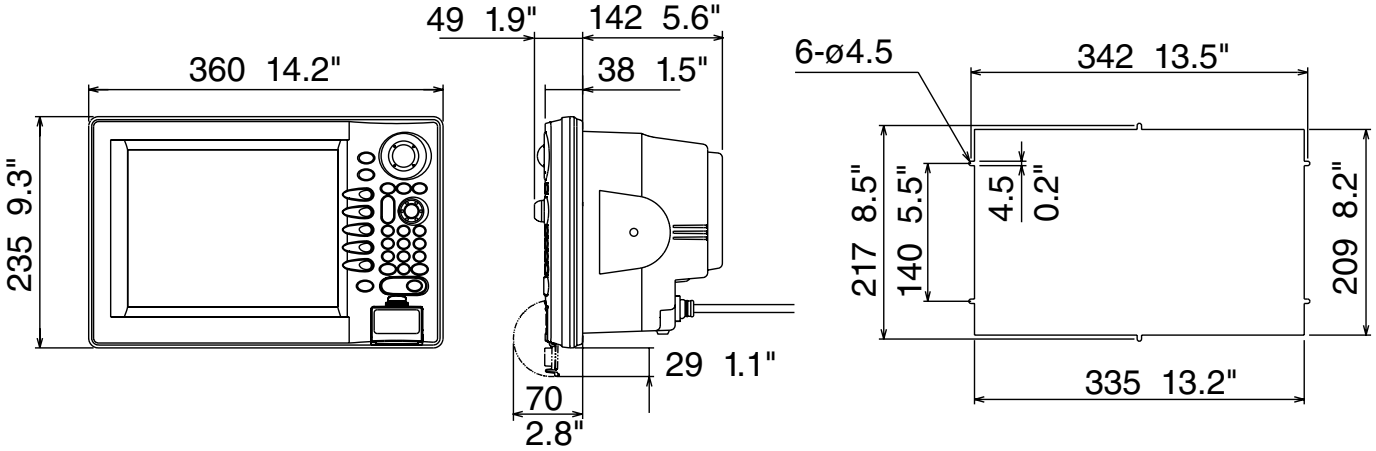
10.4" LCD (Flush Mount) 5.2 kg 11.5 lb